PortalCam

User Manual(V1.0)

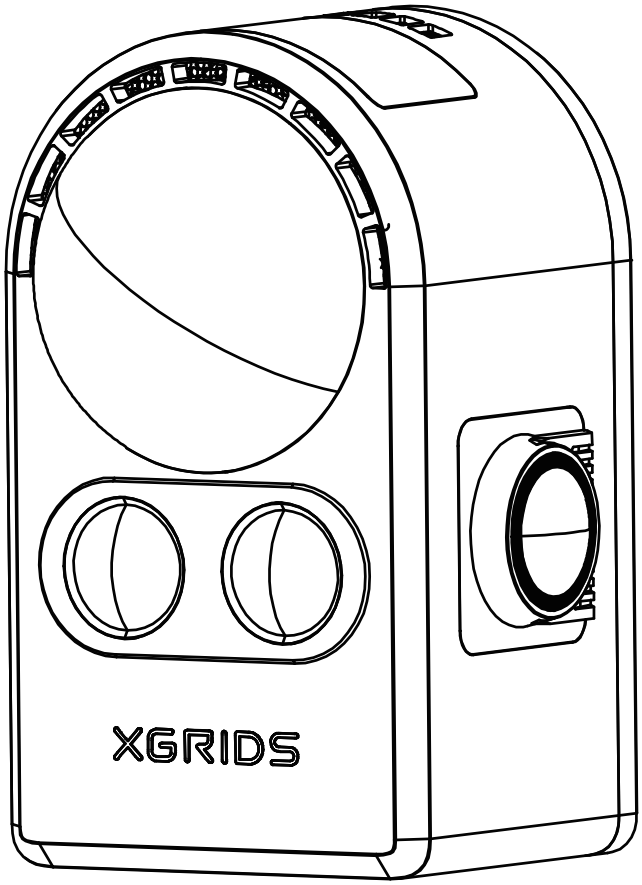

2025.09

XGRIDS

Contents

1. Device Overview 1
2. Basic Functions 2
    2.1 Battery Installation and Charging 2
    2.2 Phone Mount Installation 3
    2.3 Button and Indicator Lights 5
    2.4 Data Transfer 6
    2.5 Firmware Updates 6
3. Using LCC Scan App 7
    3.1 Connect App and Activate Device 7
    3.2 Scan Modes 9
    3.3 Scanning 10
    3.4 View Models 11
    3.5 Device Information and Settings 13
    3.6 App Settings 14
4. Maintenance and Care 15
    4.1 Storage 15
    4.2 Safety and Care Instructions 16
Specifications 17

1. Device Overview

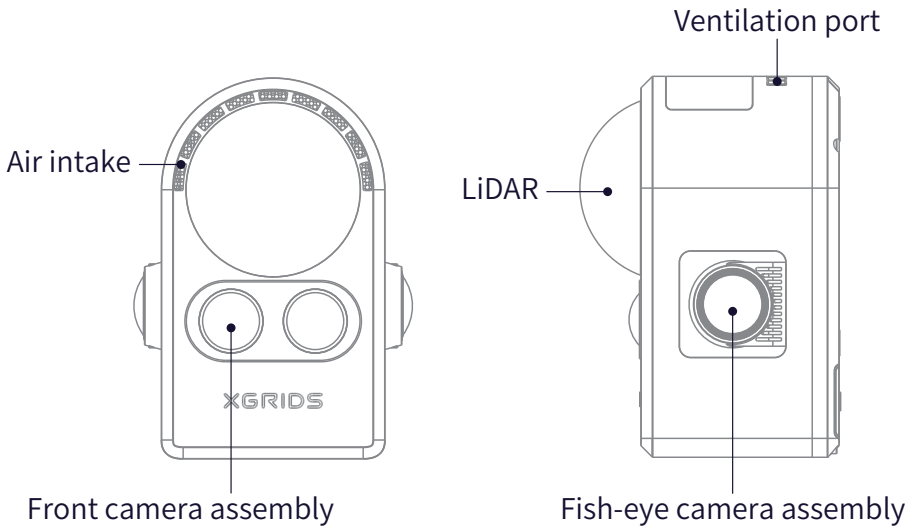

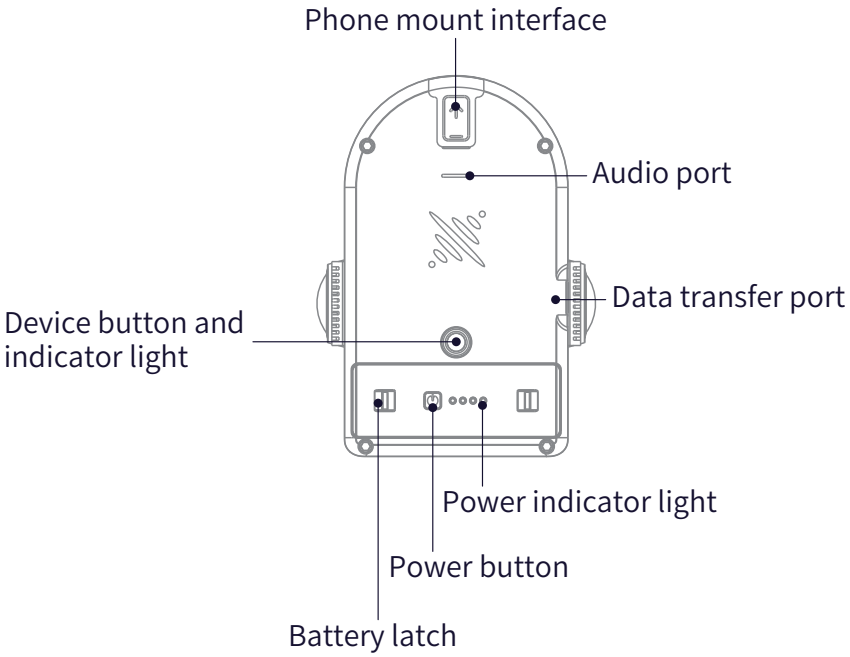

1. When the device is powered on, it enters normal power consumption mode. If no scanning operation is initiated within 5 minutes, the device will enter low-power mode. In this mode, power consumption is approximately one-third of that in normal mode, the radar stops working, but data can still be copied. Additionally, after a scan is completed, if the device remains in standby mode for 5 minutes without any operation, it will also enter low-power

2. The device emits an audible alert during startup , shutdown, when the battery level drops below 20%, and when it drops below 10%. During recording, if the battery level falls below 10%, the device will forcibly stop recording and automatically save the data. When the battery level drops below 5%, the device will automatically shut down to protect itself.

3. If a battery with less than 10% charge is inserted into the device, the device will not power on.

2. Basic Functions

2.1 Battery Installation and Charging

Battery Installation

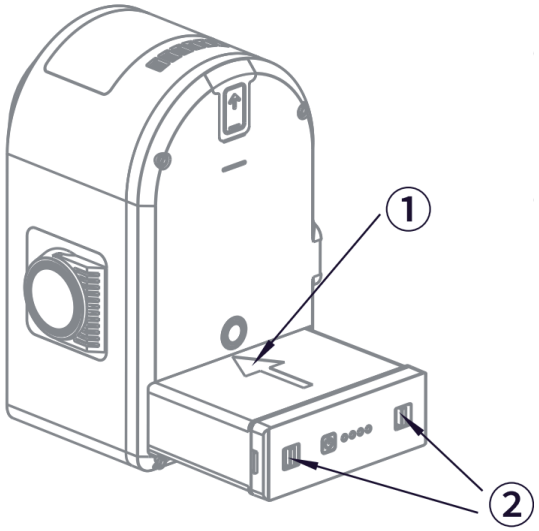

1. Insert battery with arrow-marked side facing up, following the guide direction
2. Push battery into device base along the guide slot using two fingers at the marked position until fully inserted. Red indicator appears if not properly seated
3. To remove: pinch the marked position with two fingers until battery pops out

Battery Charging and Indicators

Charging: Use included charger and cable with Type-C port.

- 0-100% charge time: ~90 minutes.
- Recommended charging temperature: 5°C-30°C.

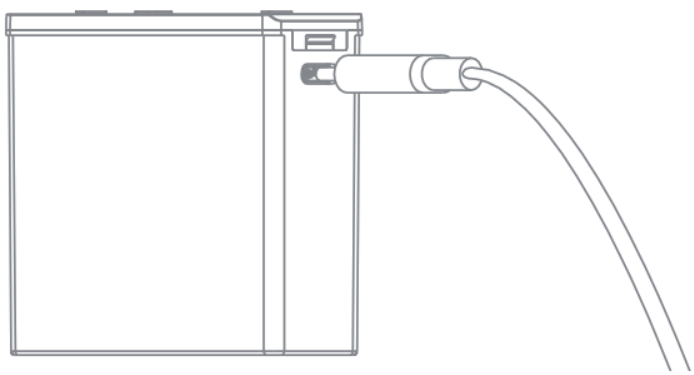

Charging Status Indicators:

LED Pattern	Battery Level
●○○○	0-25%
●●○○	26%-50%
●●●○	51%-75%
●●●●	76%-99%
●●●●	100%

● solid ● flashing ○ off

Non-charging Status Indicators:

LED Pattern	Battery Level
○○○○	0-9%
●○○○	10-25%
●●○○	26%-50%
●●●○	51%-75%
●●●●	76%-100%

● solid ○ off

Battery Care Requirements:

1. **After use:** Fully charge the battery when finished scanning for the day
2. **Long-term storage:** If device won't be used for a while, charge battery at least once every 3 months
3. **Low battery:** If battery level drops below 10% or drains completely, charge within 3 days

⚠ **Warning:** Lithium batteries can be permanently damaged if left uncharged too long. Damaged batteries cannot be repaired and replacement is not covered under warranty.

2.2 Phone Mount Installation

As shown in the figure below, insert the phone holder into the cold shoe slot on the back cover of the device with the arrow facing down.

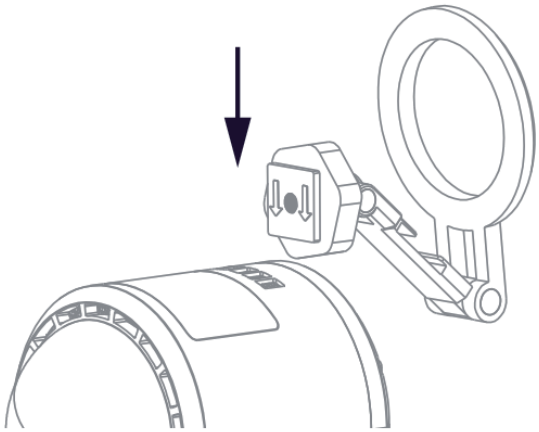

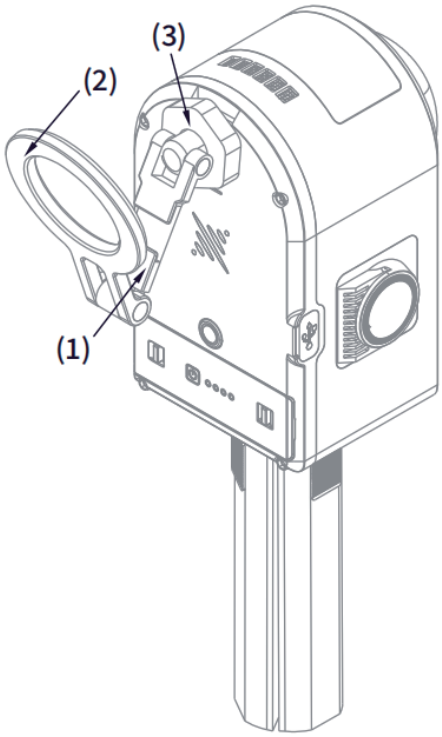

1. **Orientation:** Install the phone mount correctly with the groove facing upward. (arrow 1)
2. **Phone placement:** The circular ring (arrow 2) is the magnetic attachment point for your phone
3. **Securing:** Tighten knob (arrow 3) to lock mount in place

Note

Magnetic Phone Mount:

- **Phones with magnetic rings:** Remove case before mounting
- **Phones without magnetic rings:** Use magnetic case
- Standard phone cases may interfere with connection and are not recommended

2.3 Button and Indicator Lights

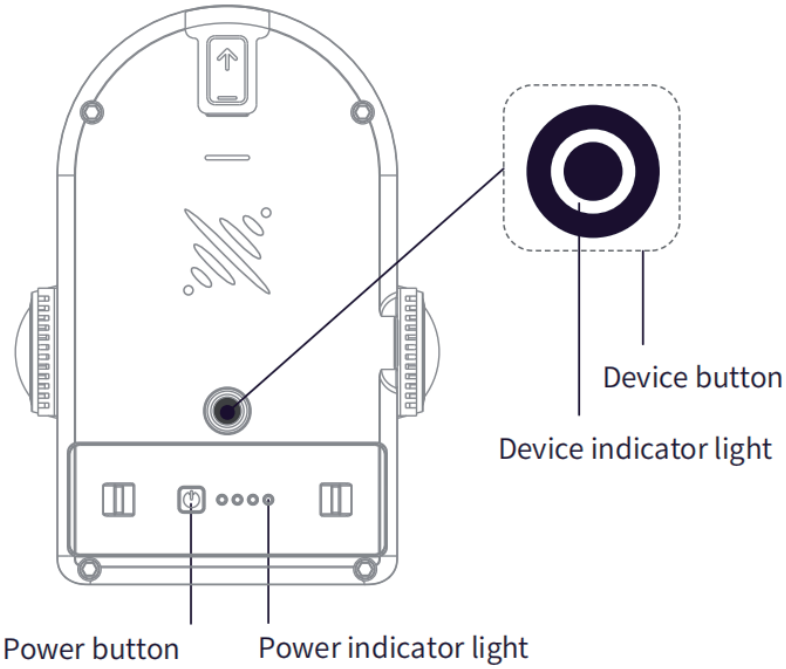

Device Controls

Function	Button Operation
Power On	Long press battery button 2s
Power Off	Long press battery button 2s (from standby)
Start Scanning	In standby mode, double-press the device button
Stop Scanning	While scanning, double-press the device button
Switch to USB Mode	In standby mode, single-press device button + device LED shows white + single-press device button

Important Notes:

1. **Setup:** Place device on a flat, stable surface before starting a scan. After pressing the scan button, wait until you see the slow green flashing light before picking up and moving the device
2. **Timing:** Device takes about 25 seconds to start up, and 6 seconds to begin scanning after pressing the scan button
3. **File Saving:** When you stop scanning, the fast green flashing light means the device is saving your scan data. Do not turn off the device during this time or your scan may be lost
4. **Wait Times:** Larger scanned areas take longer to save, so the flashing may continue for several minutes

Device Status Indicators

LED Pattern	Status
Off	Device not started
Solid green	Scanning mode
Fast green flash	Starting/stopping scan
Slow green flash	Scanning mode
Slow blue flash	Starting up
Solid blue	USB mode
Solid yellow	Device not activated
Solid white	Mode switching
Solid red	Critical error
Red-green alternating	Firmware update (The battery level needs to be above 50%.)

2.4 Data Transfer

1. From standby mode (solid green LED), connect device to computer using included USB 3.0 cable.
2. After ~5 seconds, device automatically enters USB mode.

Note: Auto USB mode only works with desktop/laptop computers. For phones/tablets, use app or device button to switch manually.

3. After computer recognizes device, copy data.
4. Disconnect cable when finished - device returns to standby mode.

Important Notes:

1. USB mode auto-disables after device restart
2. To scan after turning on USB mode while the device is still on, manually exit USB mode first
3. Use only the included USB 3.0 cable for optimal speed and reliability.

2.5 Firmware Updates

App prompts when firmware updates are available.

- **Small updates:** Install directly through app
- **Large updates (>1GB):**

1. Download firmware from XGRIDS website
2. Switch device to USB mode
3. Copy firmware to device root directory

4. Power off device and restart - firmware upgrade begins automatically

3. Using LCC Scan App

3.1 Connect App and Activate Device

1. Turn on PortalCam
2. Enable Wi-Fi and Bluetooth on your phone
3. Open LCC Scan App, tap camera icon on homepage to connect PortalCam
4. Follow on-screen prompts
5. After activation, device LED changes from yellow to green

iOS:



Android:

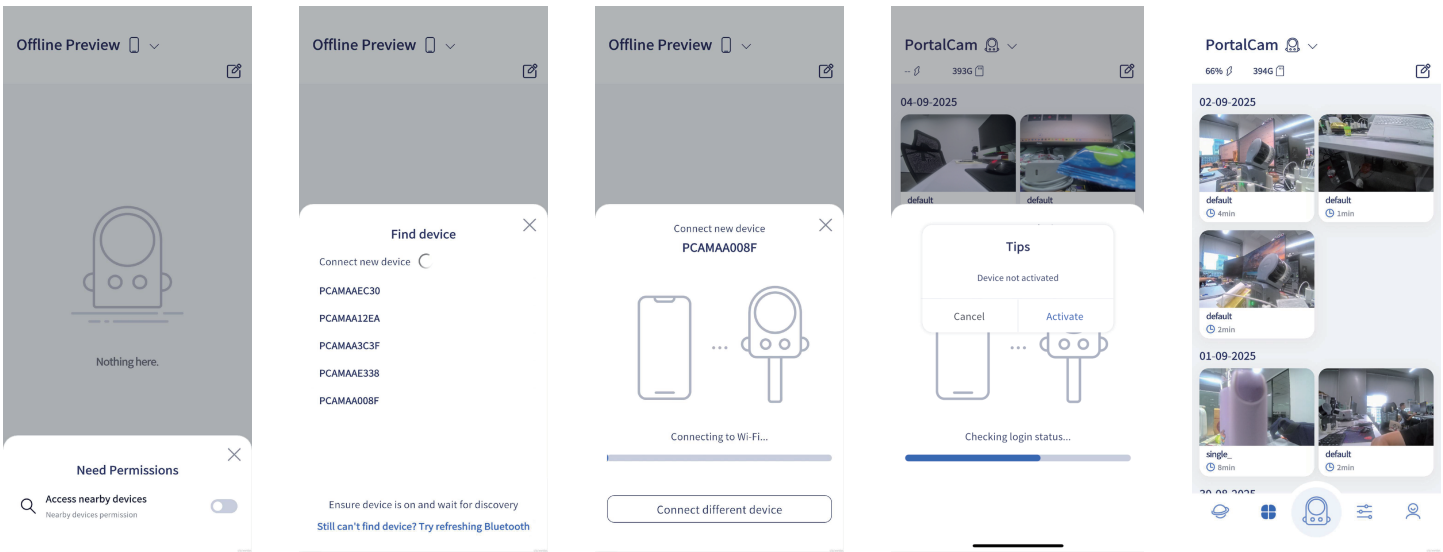

Troubleshooting

1. **Can't connect?** Check if phone can find a "PCAMAAxxxx" WiFi network. If not found, try changing Device Region in app settings.

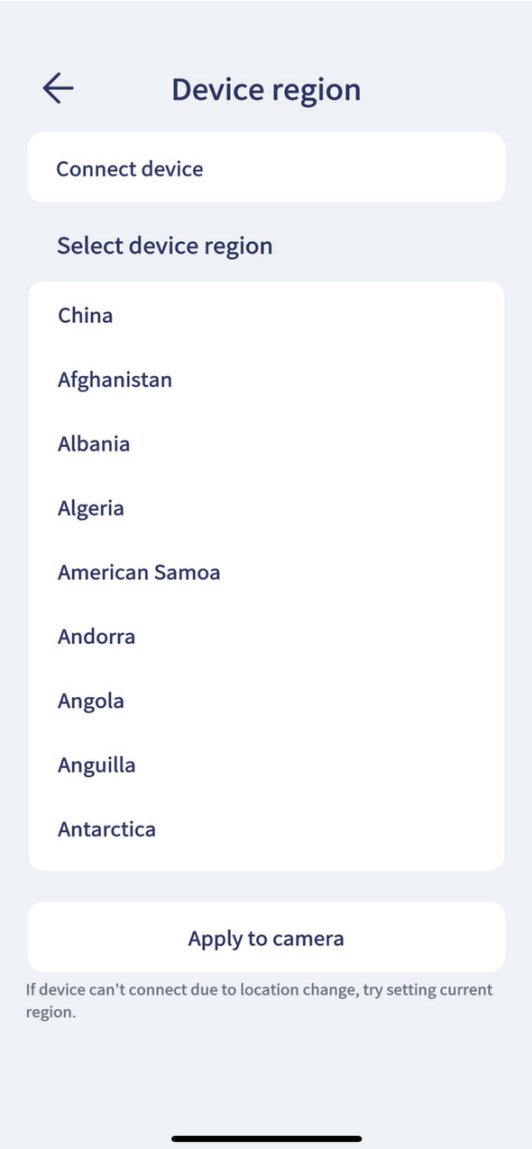

2. **App issues?** Ensure LCC Scan app is the latest version with network, Bluetooth, and local network permissions enabled.
3. **Permission check:** Verify GPS and Bluetooth permissions are granted.

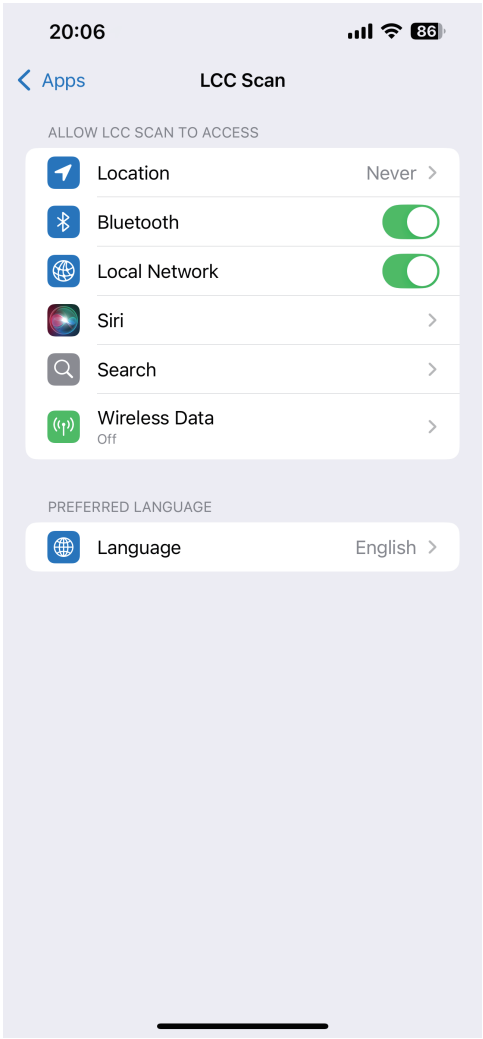

4. **Distance:** Place PortalCam near your phone during connection.

3.2 Scan Modes

Select mode by sliding.

Mode	Use Case
NIGHT	Low light environments (dawn, dusk, weak indoor lighting)
INDOOR	Standard indoor lighting (apartments, offices)
NATURE	Outdoor natural light (bright sunny conditions)

Tips:

- Choose NIGHT when transitioning from bright to dim areas
- NIGHT mode maintains LCC quality in dark environments

3.3 Scanning

1. Tap logo to enter scan page
2. **Start:** Hold the record button to start scanning



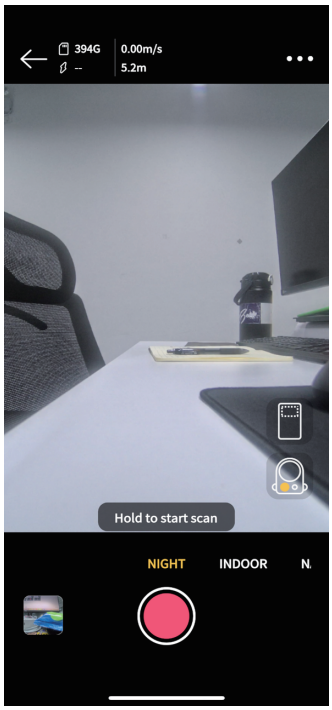

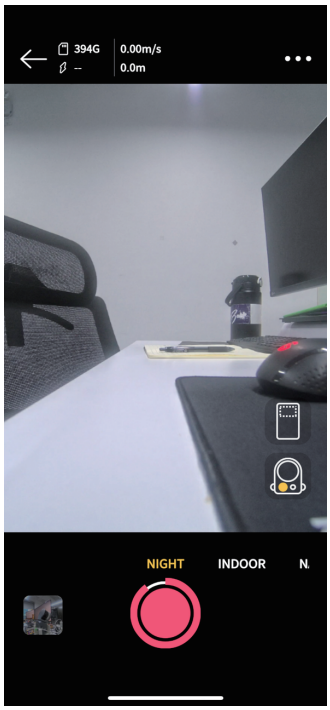

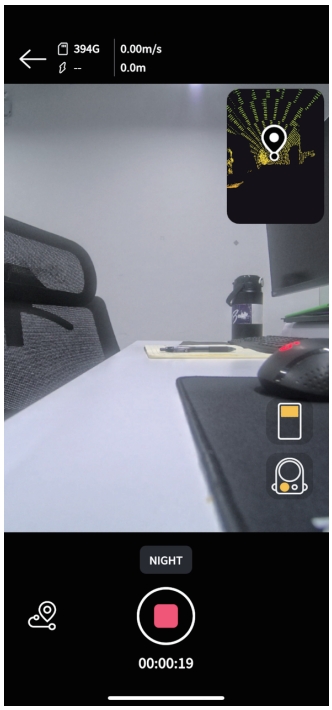

3. **Stop:** Hold the stop button to stop scan

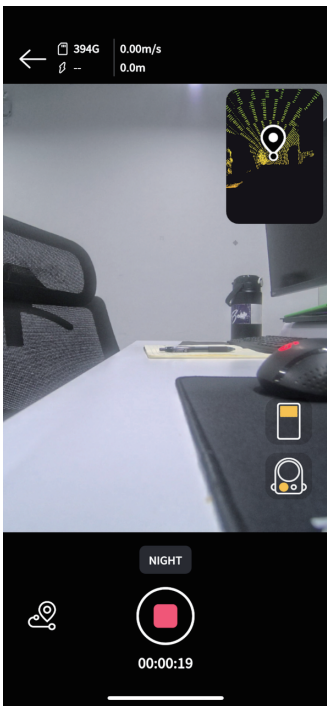

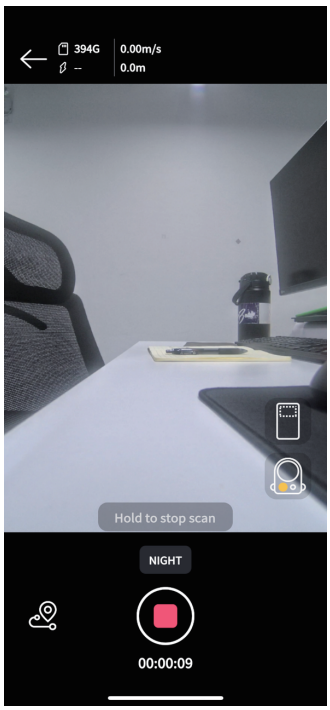

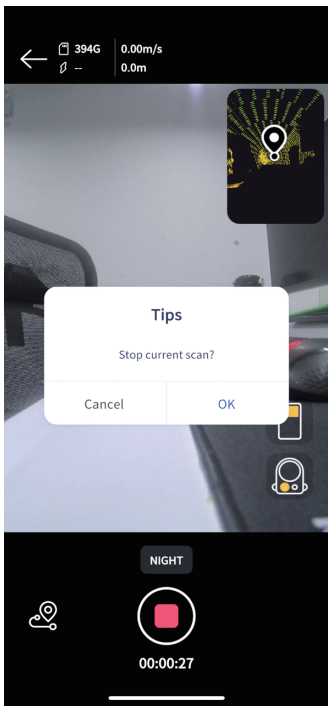

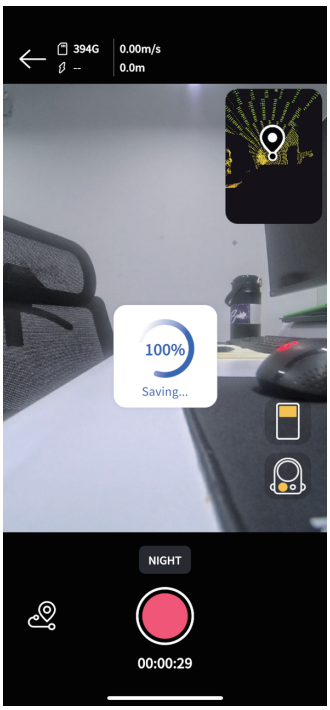

4. **Left-hand mode:** Available for left-handed operation

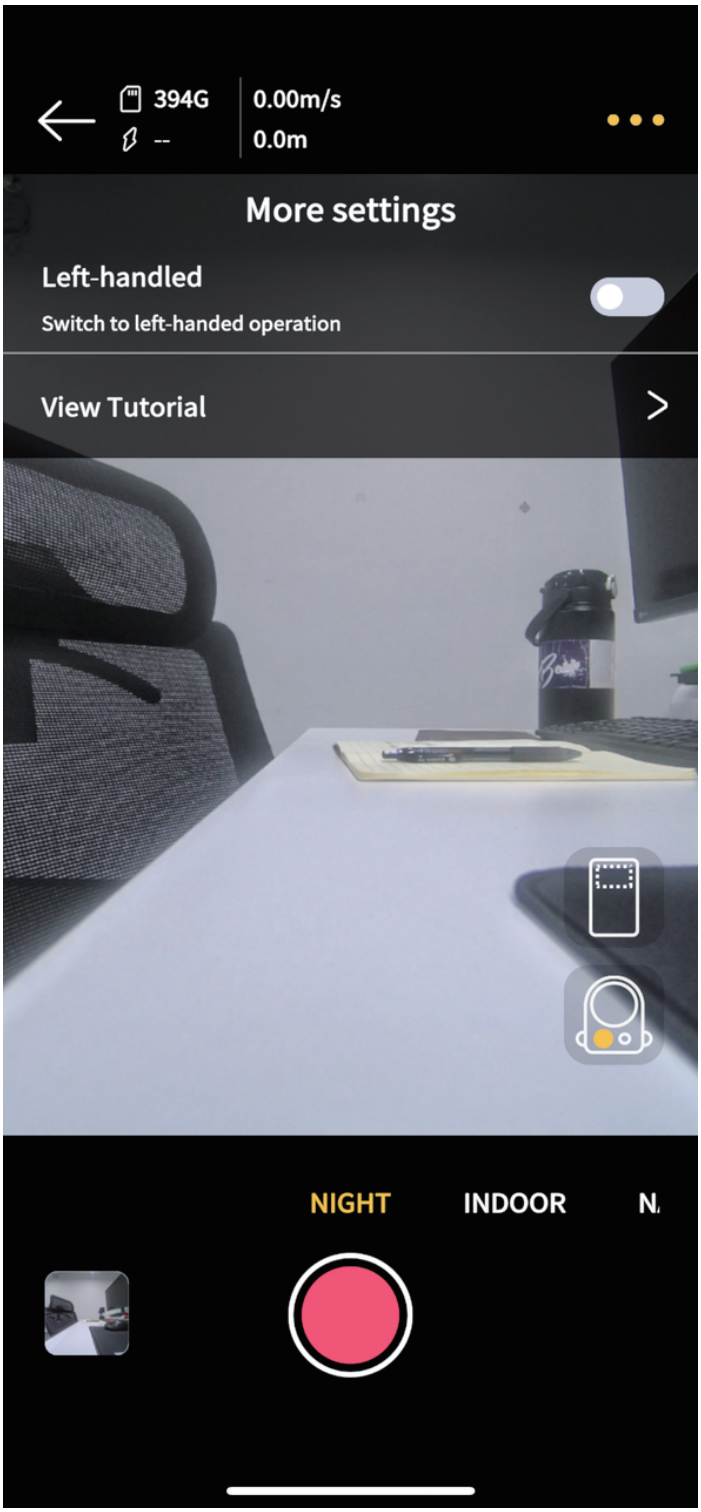

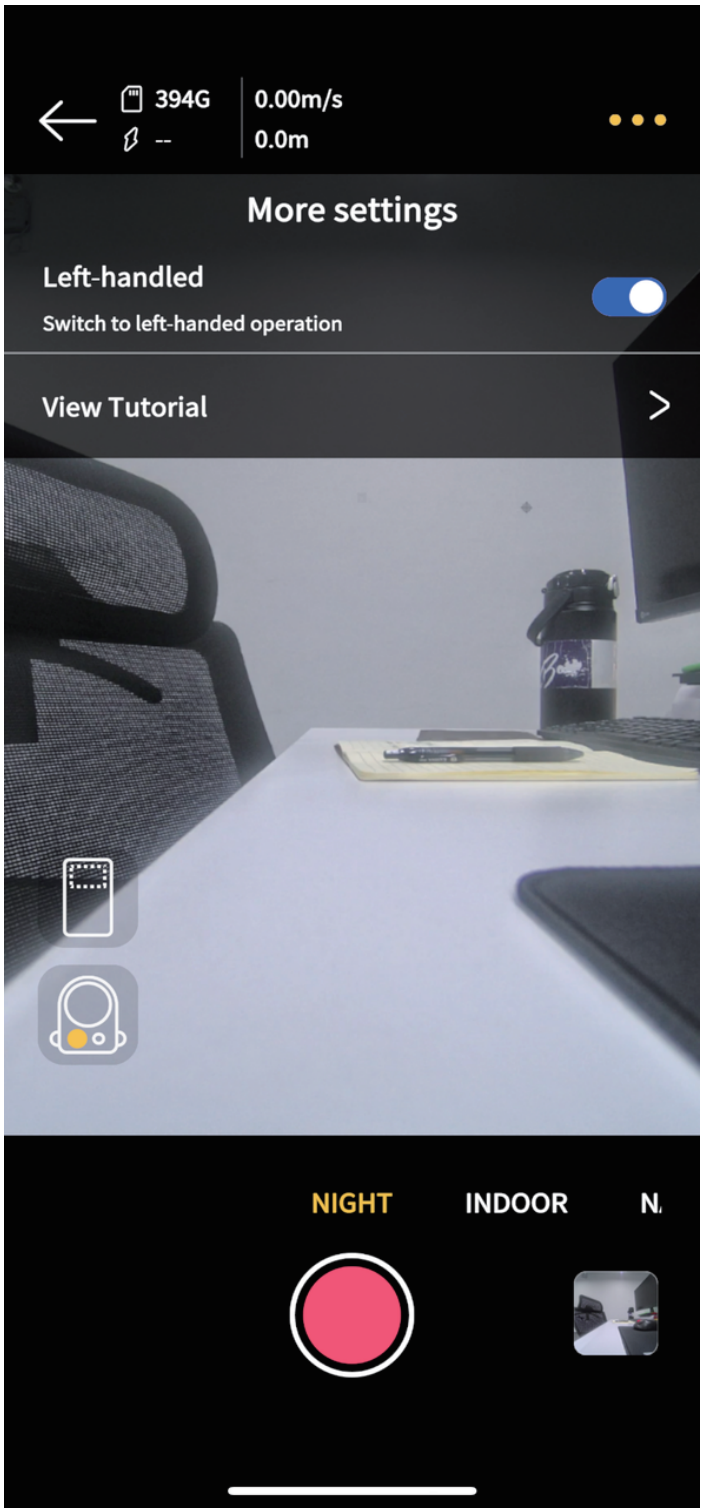

3.4 View Models

Go to gallery, tap on a card, select "View Model"



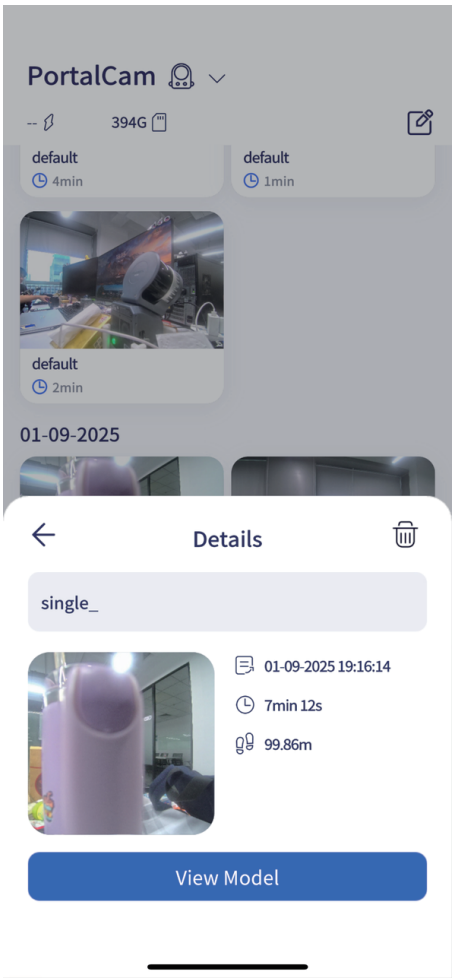

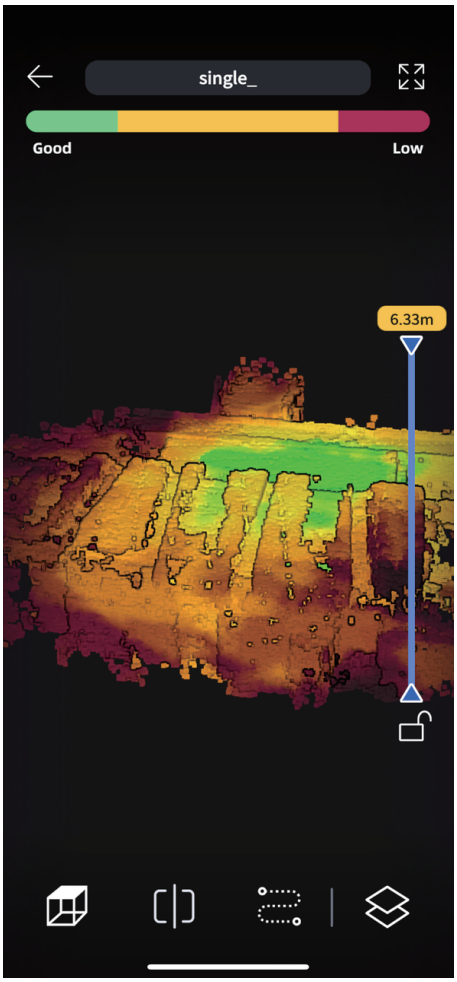

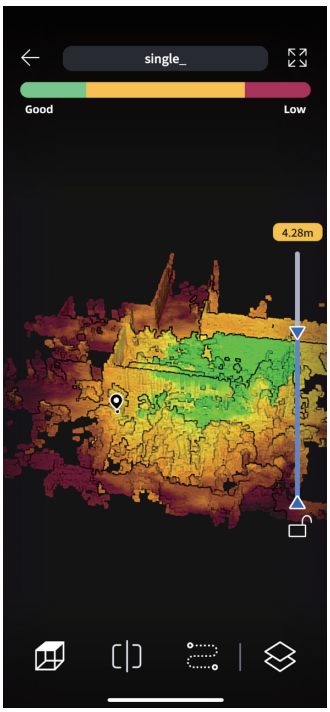

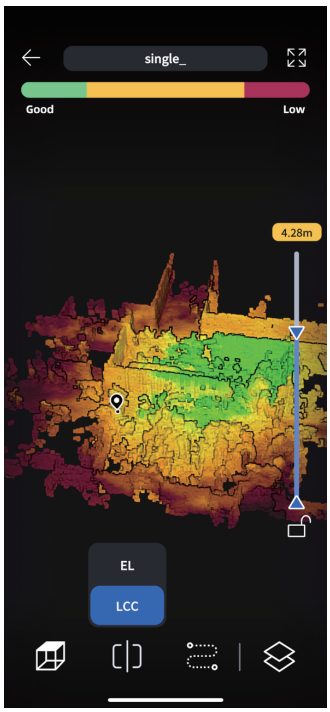

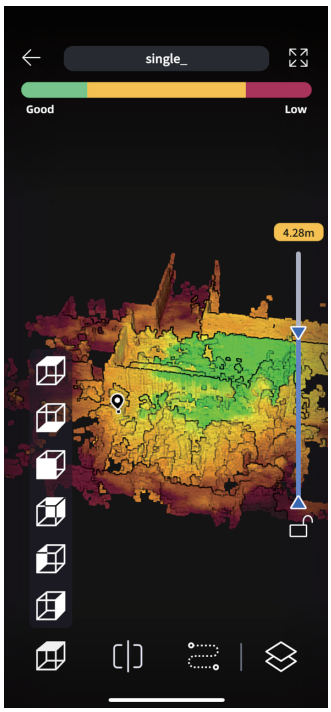

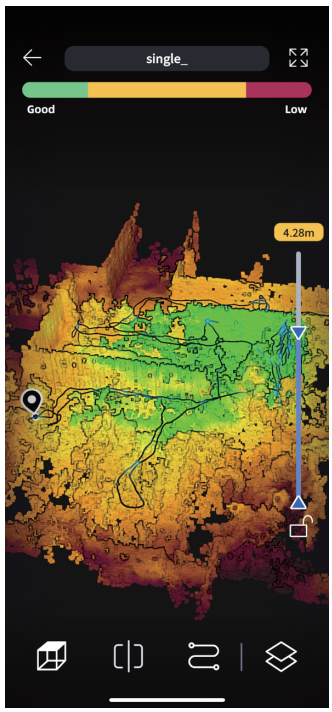

Quality indicators

Model quality will automatically be analyzed after each scan.

- Green: Excellent quality
- Yellow: Good quality

- Red: Poor quality

Tools

- **Crop:** Z-axis cropping (e.g., remove roof to view interior)
- **Multi-view:** Switch viewing angles
- **Render modes:** LCC quality mode, elevation mode
- **Trajectory:** Show scan path
- **Origin point:** Return to scan origin

3.5 Device Information and Settings



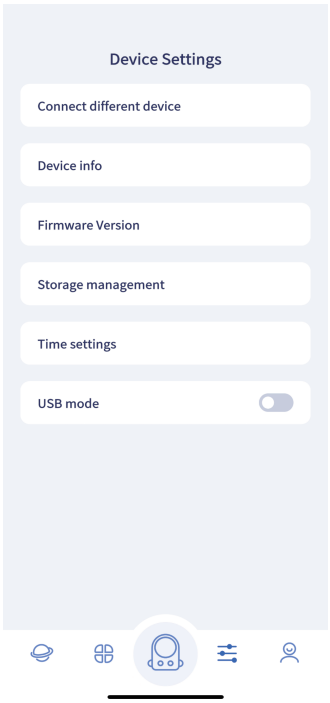

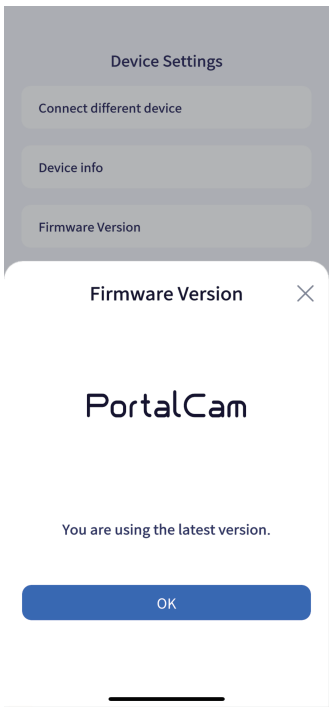

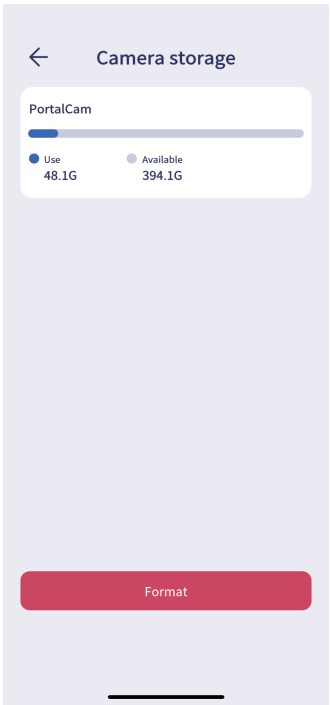

- **Storage Management:** Manage storage, format device storage
- **Firmware Version:** Upgrade firmware
- **USB Mode:** Enable USB mode
- **Time Settings:** Set device time and timezone

3.6 App Settings

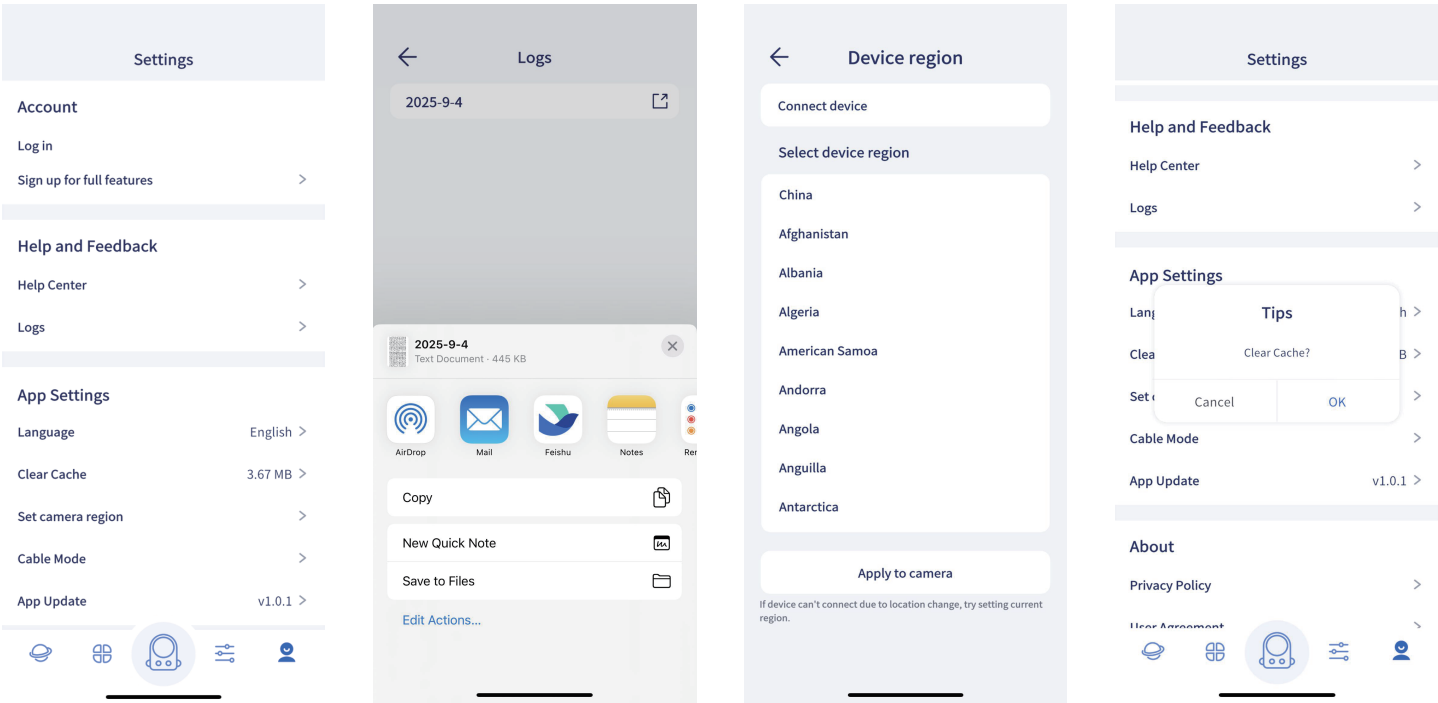

- **Logs:** Share error logs with technical support
- **Device Region:** Change region if connection fails after location change
- **Clear Cache:** Clear app cache
- **Cable Mode:** Connect via official USB cable

Transfer Files to Computer

1. Connect PortalCam to computer using official Type-C cable (device powered on)
2. PortalCam automatically enters USB mode (blue LED)
3. Computer detects PortalCam as external drive
4. Open "model" folder to access project files

Troubleshooting: If device doesn't enter USB mode automatically (if LED stays green), use LCC Scan App to enable USB mode manually.

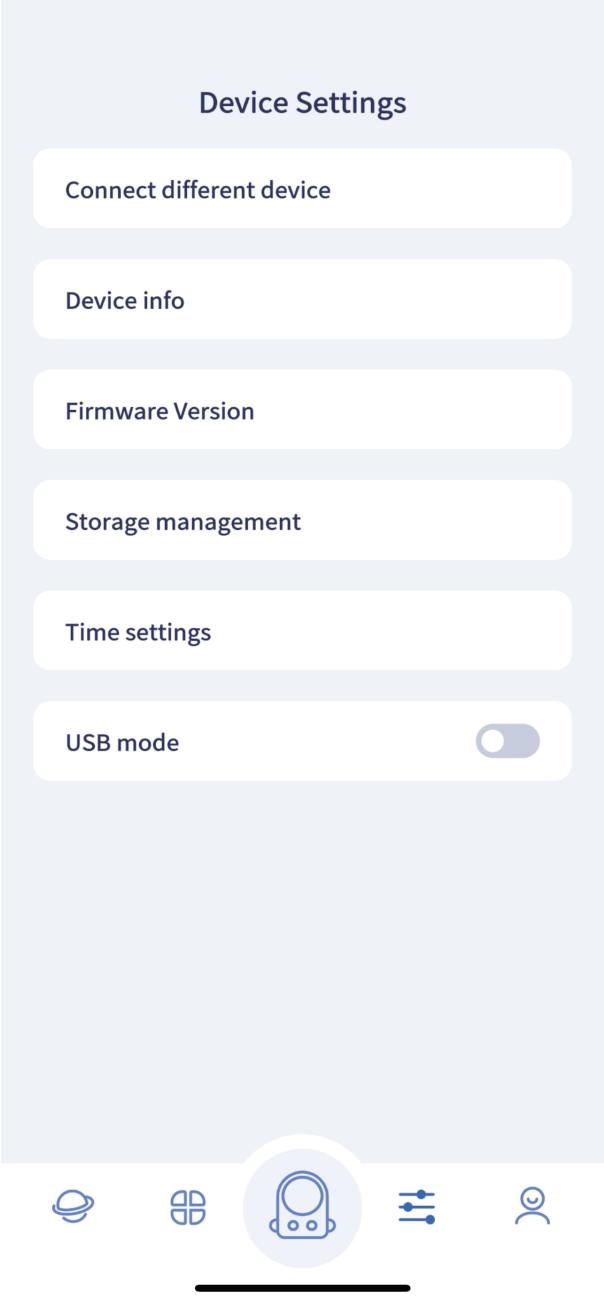

4. Maintenance and Care

4.1 Storage

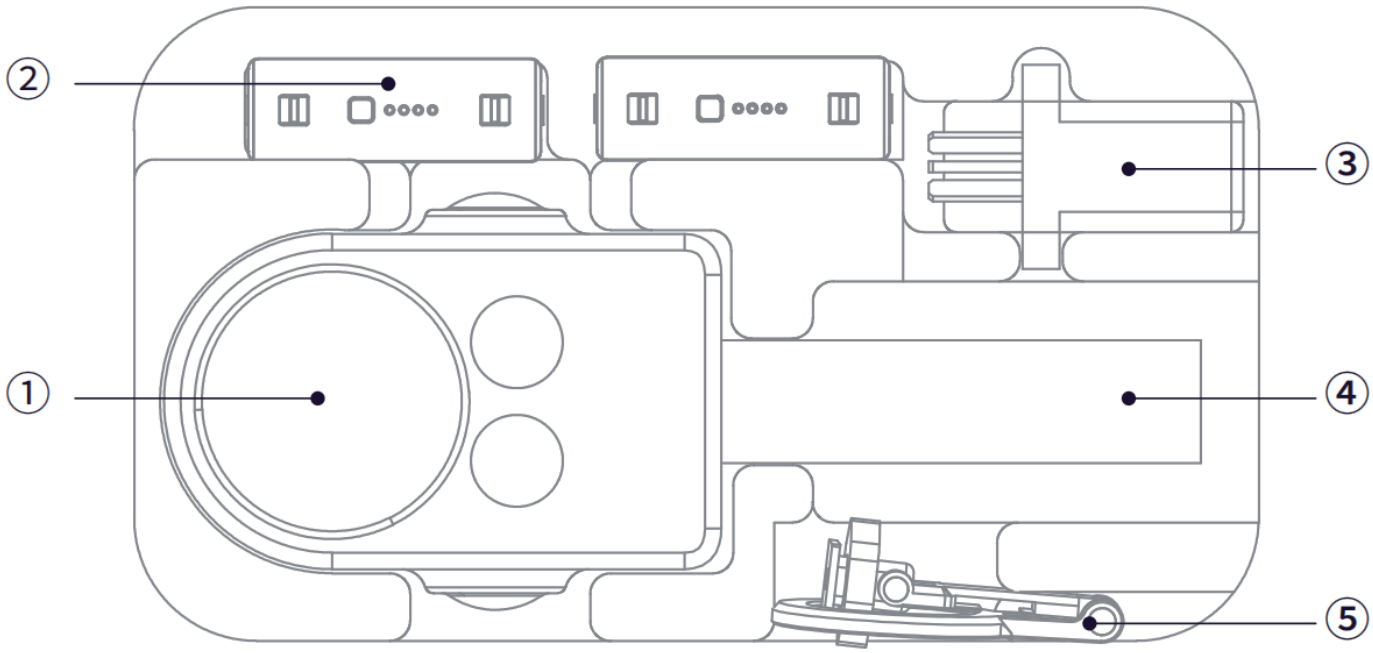

Store in included case with:

1. Device and protective cover
2. Batteries
3. Charger
4. Tripod
5. Phone mount

4.2 Safety and Care Instructions

1. **Drop/Impact Protection:** PortalCam contains precision sensors and optics. Drops or impacts may damage internal components, cause misalignment, or reduce measurement accuracy. Handle with care and use provided case for transport.
2. **Environment/Cleaning:** Avoid dusty environments, rain, or high humidity. Clean weekly or when visibly dirty using soft dry cloth or included microfiber cloth. Keep LiDAR sensor and camera lenses free of dust, fingerprints, and debris. Never touch optical surfaces directly with fingers.
3. **Initialization:** Always use tripod for initial setup. Place on stable, level ground during the startup sequence (first 25 seconds). Uneven surfaces can cause calibration errors, resulting in distorted scan data or scan failures.
4. **Temperature Safety:** Device body and vents may become hot during operation. Avoid prolonged skin contact with these areas. Allow cooling before storing in case.
5. **Ventilation:** Keep air intake and ventilation ports unobstructed during use. Covering vents may cause overheating and automatic shutdown to protect internal components. Maintain 5 cm or 2 inch clearance around vent areas.

Specifications

Category	Parameter	Specification
Physical Specifications	Power Consumption	<19W
	Body Weight	870g (1.9 lbs) without tripod
	Dimensions	130mm × 90mm × 77mm 5.1×3.5×3.0 in
	Housing Material	Aerospace-grade Aluminum Alloy
Connectivity & Storage	Data Interface	USB 3.0
	Internal Storage	512GB
	GPS Module	Supported
	WiFi	802.11 a/b/g/n/ac/ax
		2.4GHz: 2412-2472MHz
		5GHz: 5180-5240MHz
		5GHz: 5745-5825MHz
	Bluetooth	5.2
	Wireless Range	20m (65.6 ft)
Power System	Battery Type	Removable Li-ion
	Battery Capacity	23.04Wh
	Operating Time	60 minutes (continuous scanning)
	Charging Time (25°C/77°F)	0-90%: 70 minutes
		0-100%: 90 minutes
	Operating Temperature	-20°C to 45°C (-4°F to 113°F) (indirect sunlight only)
	Charging Temperature	5-30°C (41-86°F)
LiDAR System	Laser Classification	Class 1 / 940nm
	Scanning Range	0.1m-30m (4 in-98 ft) @ 10% reflectivity
		60m (197 ft) @ 90% reflectivity
	Field of View	180° azimuth × 180° elevation
	Point Rate	856,000 points/second
Camera System	Camera Configuration	4-camera array 2× Fisheye, 2× Front
	Image Resolution	4000 × 3000 px
	Sensor Size	1/2" CMOS
	Shutter Type	Rolling Shutter
	Fisheye Camera FOV	200° × 200° (each)
	Front Camera FOV	100° × 85° (each)

Power Adapter	Input	100-240V, 50-60Hz, 1.5A, 80VA
	Output	20V, 2.0A
	Rated Power	PD Protocol, >25W
		Standard: USB-C 45W single port
		Dual port: 25W + 20W
Accessories	Backpack with Protective Insert	Included
	Extension Pole (2m /6.6 ft)	Optional
	External Storage (512GB/1TB SSD)	Optional